Technical **Datasheet**

delta-mobrey

Ultrasonic Transmitters

Liquid Level & Flow Measurement

Series : DMSP400 and DMSP500

Key **Features**

- Non-contact, continuous measurement of Level, Contents or Open Channel Flow
- Local LCD display and push button menu for parameter display, configuration and diagnostics
- Two wire loop powered 4-20mA with HART® output
- Integral relay output option
- Speed of sound temperature compensation
- Configure to ignore disturbing object false echo
- IP67/68 construction
- Plastic, or painted aluminium enclosure

Series **Overview**

The Delta Mobrey DMSP400 and DMSP500 Series is a liquid level transmitter based on ultrasonic technology that is suitable for many liquid applications. Integral LCD display with push button controls and menu greatly simplify configuration and diagnostics.

Ultrasonic pulses are transmitted to and reflected from the liquid surface. The measured 'time-of-flight' determines the distance to the surface. By configuring the distance to the bottom of a vessel, the transmitter can calculate the liquid level and contents (volume) for linear or non-linear vessels (cylindrical, domed, spherical, etc). For open channel flow, the transmitter can calculate the flow rate from the level for a wide variety of flumes and weirs.

An internal temperature sensor compensates for temperature affects. The level, contents or flow measurement is available on the 4–20 mA and HART output. Can easily interface with the DMCU900 HART® controller for local display and complex pump control.

Product **applications**

- Level or contents measurement in storage tanks
- Wet wells, sumps, pumping station pump control
- Pump control for feeder tanks
- High or low level alarms in storage tanks
- Small or thin wall tanks
- Open channel flow
- Chemical or Hydrocarbon storage tanks

Other products

Other products we can offer :

• Compact Ultrasonic Level transmitters and Control Unit

• Submergible type level transmitters

How can we **help you?**

Delta Mobrey offers fast, efficient and knowledgeable support when and where you need it. Please visit our web site at www.delta-mobrey.com to find your local support centre or call us on:
+44 (0)1252 729140

Liquid Level & Flow Measurement
Model: DMSP400 and DMSP500

How to order

Instrument can be configured by selecting codes representing the desired features from the tables that follow.

The chart below, describes how the model code is built up. For assistance in configuring a switch that best suits your needs, please contact your local sales office.

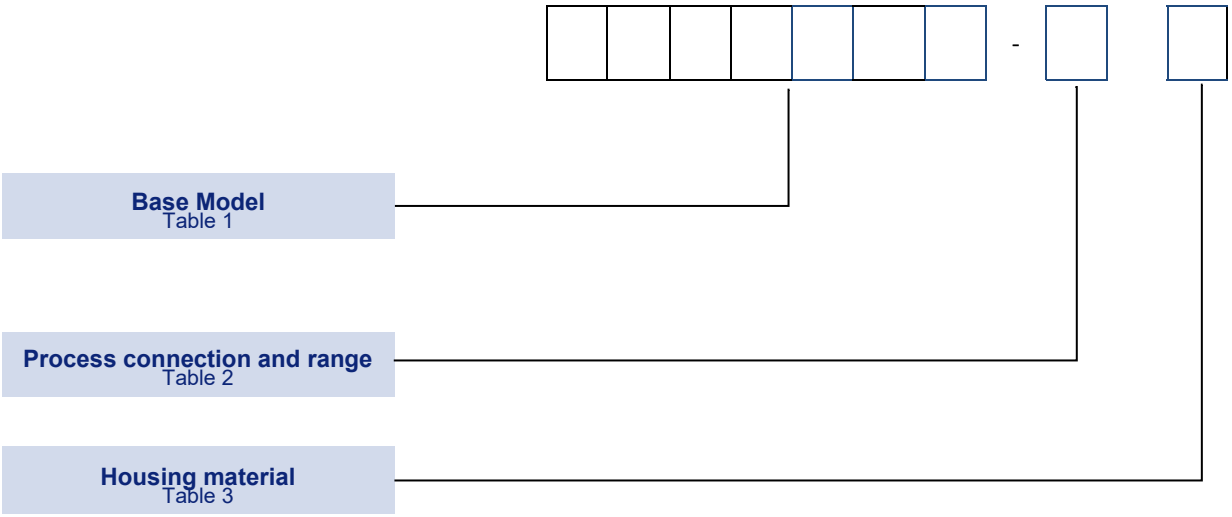

Models

TABLE 1 | | | | | | | | - | | |

Level, contents and flow. Range dependent on process connection

Description	Code
Standard model, 4-20mA output, 2 wire loop powered	**DMSP422**
Relay output, 4-20mA and HART comms, 2 wire loop powered (4 wires if using relay)	**DMSP400**
Ex certified 4-20mA and HART comms, 2 wire loop powered Ex II 1 G Ex ia IIB T6…T4 Ga	**DMSP500** **(replaces MSP900GH)**

Process Connection and Range

TABLE 2 | | | | | | | | - | | |

Process connection and range		Code
1-1/2” BSP	Range: 0.20m to 4 m	**A**
1-1/2” NSP		**C**
2” BSP	Range: 0.25m to 6 m	**B**
2” NPT		**N**
2” BSP	Range: 0.35m to 8 m	**D**
2” NPT		**E**
DN80 PN16	Range: 0.35m to 10 m	**F**
3” ANSI 150		**G**
DN125 PN16	Range: 0.45m to 15 m	**J**
5” ANSI 150		**K**
DN150 PN16	Range: 0.45m to 15 m	**L**
6” ANSI 150		**M**
DN150 PN16	Range: 0.60m to 25 m	**P**
6” ANSI 150		**Q**

Housing Material

TABLE 3 | | | | | | | | - | | |

Sensor material : PVDF

Description	Code
PLASTIC (PBT)	**8**
ALUMINIUM PAINTED	**9**

Technical Specification

DMSP400 / 500
ULTRASONIC LEVEL, CONTENTS AND FLOW TRANSMITTER

DMSP400/500

Operating Pressure (absolute): 0.5 TO 3 bar (7.3 to 43.5 psia)

	DMSP422 / DMSP400	DMSP500
Operating Temperature and Ambient (plastic housing)	-30°C to 90°C (-22 to 194°F)	-20°C to 80°C (-4°F to 176°F) T6
Ambient (aluminium housing)	-25°C to 70°C (-13 to 158°F)	-20°C to 70°C (-4°F to 156°F)
	-25°C to 70°C (-13 to 158°F)	-25°C to 70°C (-13°F to 156°F)

Display: 6 digit LCD display

Ranges: From 0.25m to 25m depending on model. Further ranges available on request.

Transducer specifics

Range	Process connection	Beam angle	Frequency
0.2m to 4m	1-1/2 ”BSP/NPT	6°	80 kHz
0.25m to 6m	2” BSP/NPT	5°	80 kHz
0.35m to 8m	2” BSP/NPT	7°	60 kHz
0.35m to 10m	3” Flanged	5°	60 kHz
0.45m to 15m	5” Flanged	5°	40 kHz
0.6m to 25m	6” Flanged	7°	20 kHz

Accuracy: ± (0.2% of measured distance +0.05% of range)

Resolution (acc. to range):
<2 m: 1 mm
2…5 m: 2 mm
5…10 m: 5 mm
>10 m : 10mm

Wiring configuration: 2 wires (or 4 wires when using relay output)

Alarm switching function: 1 SPDT, 30 V DC, 1 A DC connected in parallel (DMSP400 only)

Analog + digital Output signal: 4-20mA + HART®

Power Supply: 12 to 36 V DC 48mW—720mW DMSP500: 12—30 V DC 48mW—600 mW

IP rating: IP67/68 (housing/sensor)

Ex marking (DMSP500 only): Ex II 1 G Ex ia IIB T6…T4 Ga

Intrinsically safe data: Ci ≤ 15 nF, Li ≤ 200 µH, Ui ≤ 30 V, Ii ≤ 140 mA, Pi ≤ 1 W

Electric protection: Class III with DC power supply;

Electrical connection: 2x M20x1.5 cable glands + internal thread for 2x ½" NPT cable protective pipe,

Terminal board: For wire cross section max 1.5 mm² (AWG15)

Process connection: See range and sensor size

Weight (with 3m of Cable): 1.3 - 2.3 Kgs

Special Engineering

Many other options already designed and configured, for example:
- Stainless Steel sensor
- Special construction

Other options can also be designed to meet specific requirements of an application. Please contact us for further information.

Installation Accessories

Installation Brackets for horizontal mounting off a tank wall or supporting structure.

Available with 1 1/2” or 2” threads to fit DMSP400 and DMSP500 transmitters with threaded connections.

Connection	Model option	200mm length	500mm length	700mm length
1 1/2” BSP	A	DMBR022	DMBR052	DMBR072
1 1/2” NPT	C	DMBR023	DMBR053	DMBR073
2” BSP	B, D	DMBR024	DMBR054	DMBR074
2” NPT	N, E	DMBR025	DMBR055	DMBR075

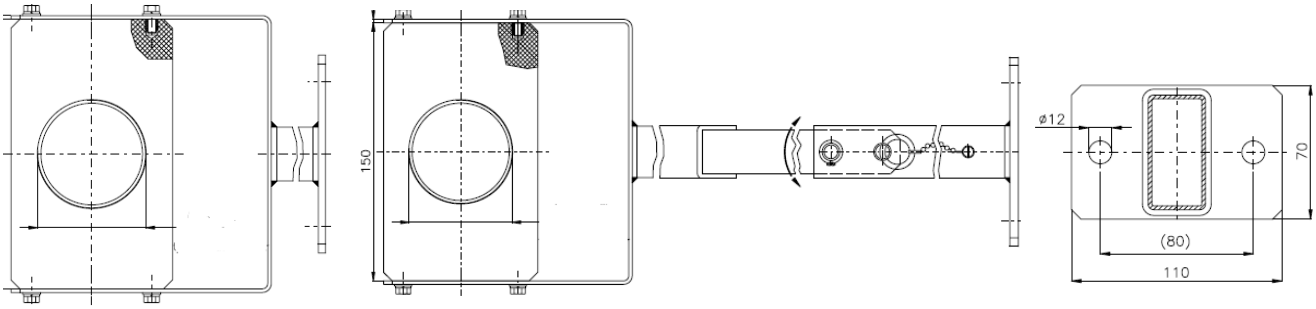

DMBR02* DMBR05* / DMBR07* DMBR0**

A range of flange adaptors are also available on request

Approvals

EUROPEAN DIRECTIVES

Electromagnetic Compatibility Directive (EMC) 2014/30/EU
Compliant to EMC directive

Pressure Equipment Directive (PED) 2014/68/EU:
This product is outside the scope of the PED directive

ATEX Directive 2014/34/EU

Intrinsically Safe:

Certificate No. BKI20ATEX0019 X

EN 60079-0, EN 60079-11

For Zone 0 models (Code DMSP500, see Table 1)

II 1 G Ex ia IIB T6...T4 Ga
With plastic housing (-20°C ≤ Ta ≤ +70°C)
With metal housing (-30°C ≤ Ta ≤ +70°C)
With display (-25°C ≤ Ta ≤ +70°C)

Dimensions

Sensor dimensions		
1-1/2” Process connection. 4m Range Sensor diam. 42mm	2” Process connection. 6m Range. Sensor diam. 54mm	2” Process connection. 8m Range. Sensor diam. 54mm
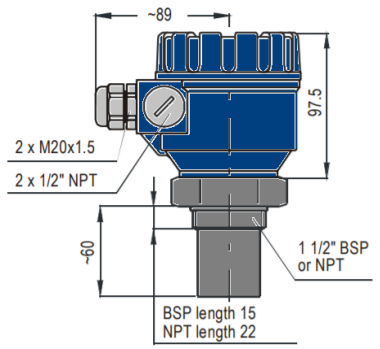	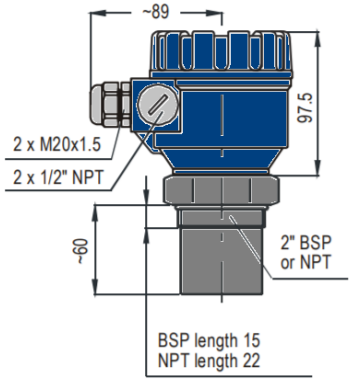	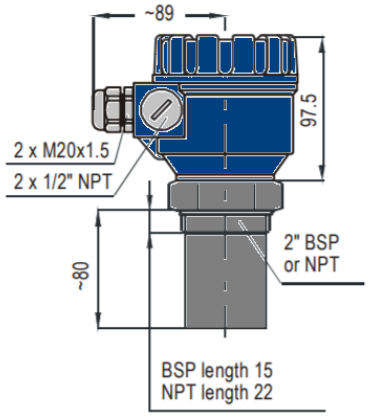
3” / DN80 flanged connection: 10m Range Sensor diam. 74mm	5” / DN125 flanged connection: 15m Range Sensor diam. 122mm	6” /DN150 flanged connection. 25m Range Sensor diam. 148mm
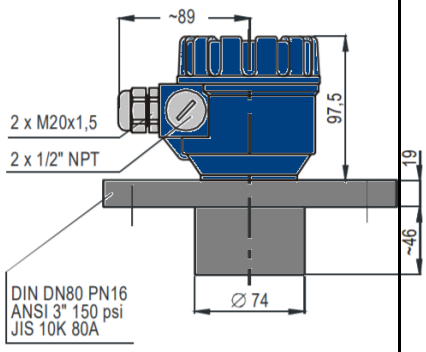	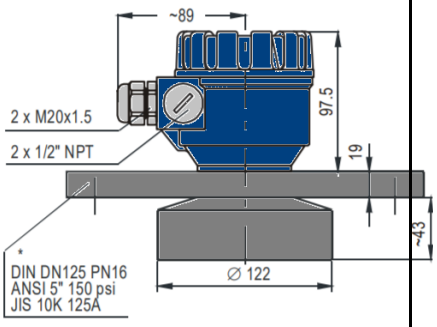	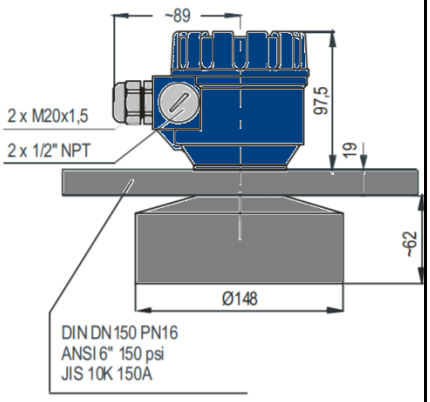

BESTOBELL AQUATRONIX
SINCE/DEPUIS 1953

Head Office
2880 Argentia Road, Unit 3
Mississauga, ON L5N 7X8
salesdesk@bestobell.com
1-800-668-3979
www.bestobell.com

Montréal Office
970 Montée de Liesse, #204
St.Laurent, QC H4T 1W7
ventes@bestobell.com
1-877-331-1225

Atlantic Office
166 North Side Road
Riverport, NS B0J 2W0
dmossman@bestobell.com
902-529-0355

Since 1953, Quality Products to Sense, Measure & Control

Depuis 1953, Produits De Qualités Pour Détecter, Mesurer & Contrôler

In the interest of development and improvement Delta Mobrey Ltd, reserves the right to amend, without notice, details contained in this publication. No legal liability will be accepted by Delta Mobrey Ltd for any errors, omissions or amendments.

Delta Mobrey Limited
Hudson House, Albany Park Camberley Surrey, GU16 7PL, UK.
T+44 (0)1252 729140 **F**+44 (0)1252 729168 **E** sales@delta-mobrey.com **W** www.delta-mobrey.com

ISO9001
FM00720